HANGING LANTERN

INSTALLATION INSTRUCTIONS

Installation is to be by a qualified electrician in accordance with all applicable electric codes.

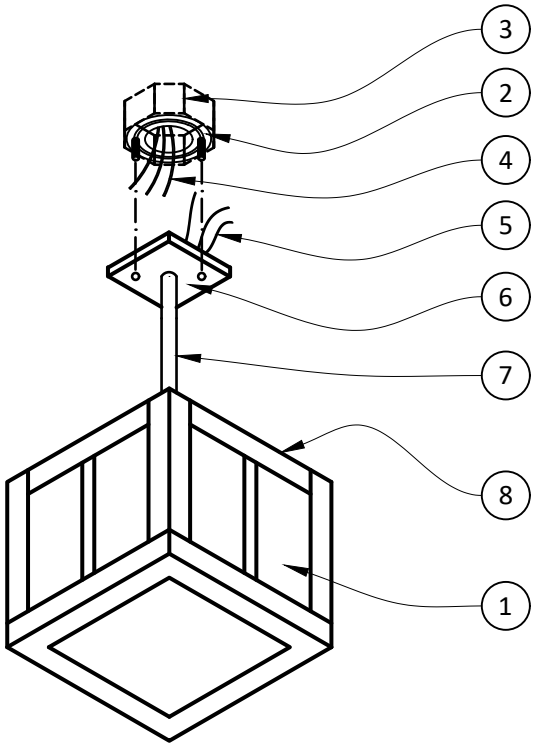

1. Light fixture by TWO HILLS STUDIO. Actual shape may vary.
2. Attach universal bracket provided with fixture to the junction box with threaded screws pointing down.
3. Electrical junction box in ceiling by others. **TURN OFF ELECTRICITY TO ELECTRICAL BOX BEFORE INSTALLING THE FIXTURE**.
4. Connect ground wire from junction box to the green screw on the universal bracket or to a separate ground wire on the fixture if provided.
5. Connect the black and white wires from the fixture to the corresponding black and white wires from the junction box using appropriate wire nuts. Tuck the wires into the junction box.
6. Fasten the fixture canopy to the threaded screws on the universal bracket with knurled lock nuts and balls or nuts provided. Secure these joints with Locktite 262 liquid threadlocker (provided) to prevent loosening of fixture due to wind or vibration. Rotate universal bracket on junction box as needed for proper alignment of fixture.
7. Pendant sleeve with threaded pipe inside. If pendant is shipped loose from fixture, attach the threaded pipe to the coupling on top of the fixture and to the canopy with lock nuts andlock washers provided. Secure these joints with Locktite 262 liquid threadlocker (provided) to prevent loosening due to wind or vibration.
8. In most models either the top or bottom is open for relamping. In other cases a hinged panel is provided. Use only bulbs indicated on the fixture.
9. Fixtures are for 120 volt power supply unless labeled otherwise. Connect only to a power supply of the proper voltage.

TWO HILLS STUDIO®

Copyright © 2019 Two Hills Studio, Inc. All rights reserved